SIEMENS

# Sinteso
## FDnet devices

Planing Tool


© Siemens Switzerland Ltd, 2021

Smart infrastructure intelligently connects energy systems, buildings and industries to adapt and evolve the way we live and work.

We work together with customers and partners to create an ecosystem that intuitively responds to the needs of people and helps customers to better use resources.

It helps our customers to thrive, communities to progress and supports sustainable development.

**Creating environments that care.**
**siemens.com/smart-infrastructure**



**Published by**
**Siemens Switzerland Ltd 2021**

Smart Infrastructure
Global Headquarters
Theilerstrasse 1a
6300 Zug
Switzerland
Tel +41 58 724 24 24

Article no. BT_0082_EN (Status 10/2021)



Subject to changes and errors. The information given in this document only contains general descriptions and/or performance features which may not always specifically reflect those described, or which may undergo modification in the course of further development of the products. The requested performance features are binding only when they are expressly agreed upon in the concluded contract.


# Sinteso – Because smarter protection matters

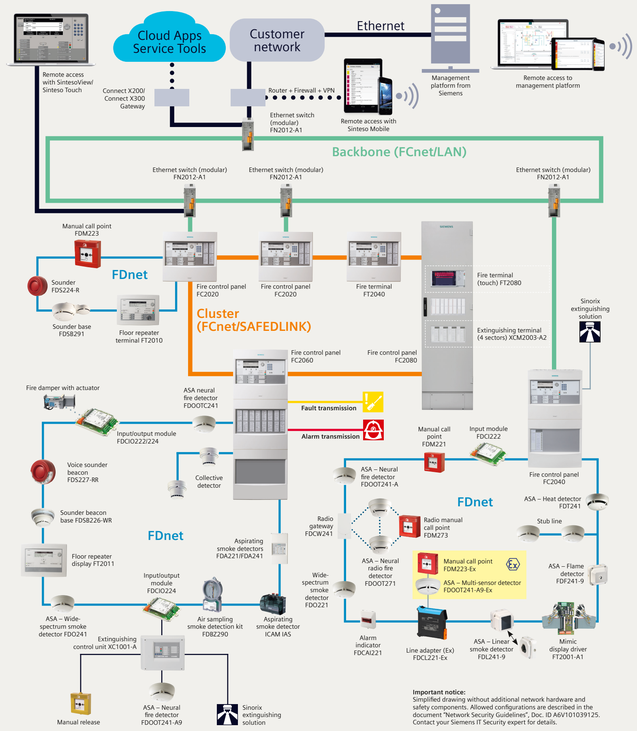


**Important notice:**
Simplified drawing without additional network hardware and safety components. Allowed configurations are described in the document "Network Security Guidelines", Doc. ID A6V10103912S. Contact your Siemens IT Security expert for details.

# Compatibility overview

| Detectors, alarm equipment, accessories | | Detector bases, base adapters, alarm devices | | | | | | | | | | | | | | | | |
|---|---|---|---|---|---|---|---|---|---|---|---|---|---|---|---|---|---|---|
| | | **FDB221** Detector base with stand-offs | **FDB222** Detector base flat | **FDB221-AA** Detector base with stand-offs and micro terminal | **FDB201** Detector base with stand-offs, collective | **FDB202** Detector base flat, collective | **FDB201-AA** Detector base with stand-offs, collective, with micro terminal | **FDB241** Base adapter for AlgoRex AnalogPLUS and SIGMALOOP | **FDB251** Base adapter for AlgoRex Interactive | **FDB271** Base radio detector | **FDB281** Base adapter for MS8 | **FDB299** Base adapter for MS9 | **FDSB291** Sounder base | **FDSB292** Sounder base, collective | **FDSB226-WX** Sounder bea-con base | **FDSB227-WX** Voice sounder beacon base | **FDB226-X** Base (wall mounting) | **FDB227-X** Base deep (wall mounting) |
| **Detectors**[1] | | | | | | | | | | | | | | | | | | |
| **FDT221/241** | Heat detector/ASA – Heat detector | ✓ | ✓ | ✓ | – | – | – | – | – | – | – | – | ✓ | – | ✓ | ✓ | – | – |
| **FDO221/241** | Wide-spectrum smoke detector/ASA – Wide-spectrum smoke detector | ✓ | ✓ | ✓ | – | – | – | – | – | – | – | – | ✓ | – | ✓ | ✓ | – | – |
| **FDOOT221** | Neural fire detector | ✓ | ✓ | ✓ | – | – | – | – | – | – | – | – | ✓ | – | ✓ | ✓ | – | – |
| **FDOOT241-A** | ASA – Neural fire detector | ✓ | ✓ | ✓ | – | – | – | – | – | – | – | – | ✓ | – | ✓ | ✓ | – | – |
| **FDOOT241-A3** | ASA – Neural fire detector, used as AlgoRex AnalogPLUS detector or as Sinteso detector | ✓ | ✓ | ✓ | – | – | – | ✓ | – | – | – | – | ✓ | – | ✓ | ✓ | – | – |
| **FDOOT241-A4** | ASA – Neural fire detector, used as SIGMALOOP detector or as Sinteso detector | ✓ | ✓ | ✓ | – | – | – | ✓ | – | – | – | – | ✓ | – | ✓ | ✓ | – | – |
| **FDOOT241-A5** | ASA – Neural fire detector, used as AlgoRex Interactive detector or as Sinteso detector | ✓ | ✓ | ✓ | – | – | – | – | ✓ | – | – | – | ✓ | – | ✓ | ✓ | – | – |
| **FDOOT241-A9** | ASA – Neural fire detector, used as collective detector or as Sinteso detector on the FDnet | ✓ | ✓ | ✓ | ✓ | ✓ | ✓ | – | – | – | – | – | ✓ | ✓ | ✓ | ✓ | – | – |
| **FDOOT241-8** | ASA – Neural fire detector, used in the MS8 detector system or as Sinteso detector on the FDnet | ✓ | ✓ | ✓ | – | – | – | – | – | – | ✓ | – | ✓ | – | ✓ | ✓ | – | – |
| **FDOOTC241** | ASA – Neural fire detector with CO sensor | ✓ | ✓ | ✓ | – | – | – | – | – | – | – | – | ✓ | – | ✓ | ✓ | – | – |
| **FDOOT271** | ASA – Neural radio fire detector | – | – | – | – | – | – | – | – | ✓ | – | – | – | – | – | – | – | – |
| **Alarm devices** | | | | | | | | | | | | | | | | | | |
| **FDS224-X** | Sounder | – | – | – | – | – | – | – | – | – | – | – | – | – | – | – | ✓ | ✓ |
| **FDS225-X** | Voice sounder | – | – | – | – | – | – | – | – | – | – | – | – | – | – | – | ✓ | ✓ |
| **FDS226-XX** | Sounder beacon | – | – | – | – | – | – | – | – | – | – | – | – | – | – | – | ✓ | ✓ |
| **FDS227-XX** | Voice sounder beacon | – | – | – | – | – | – | – | – | – | – | – | – | – | – | – | ✓ | ✓ |
| **Accessories** | | | | | | | | | | | | | | | | | | |
| **FDBZ293** | Detector locking device against theft | ✓ | ✓ | ✓ | ✓ | ✓ | ✓ | – | – | – | ✓ | ✓ | ✓ | ✓ | ✓ | ✓ | ✓ | ✓ |
| **DBZ1190-AA** | Micro terminals, for wire strengths of 0.28 mm² to 0.5 mm² | ✓ | ✓ | ✓ | ✓ | ✓ | ✓ | – | – | – | ✓ | ✓ | – | – | ✓ | ✓ | ✓ | ✓ |
| **DBZ1190-AB** | Connection terminals, for wire strengths of 1.0 mm² to 2.5 mm² | ✓ | ✓ | ✓ | ✓ | ✓ | ✓ | – | – | – | ✓ | ✓ | – | – | ✓ | ✓ | ✓ | ✓ |
| **FDBZ291**[2] | Designation plate | ✓ | ✓ | ✓ | ✓ | ✓ | ✓ | – | – | – | ✓ | ✓ | – | – | ✓ | ✓ | ✓ | ✓ |
| **FDBZ295**[2] | Sealing element | ✓ | – | ✓ | ✓ | – | ✓ | – | – | – | – | – | – | – | – | – | – | – |
| **FDBZ297**[2] | Detector base seal | – | – | – | – | – | – | – | – | – | – | – | – | – | – | – | – | – |
| **FDB295**[3] | Base attachment wet | ✓ | ✓ | ✓ | ✓ | ✓ | ✓ | – | – | – | – | – | – | – | – | – | – | – |
| **FDB293**[3] | Base attachment humid | ✓ | ✓ | ✓ | ✓ | ✓ | ✓ | – | – | – | – | – | – | – | – | – | – | – |
| **FDB291**[4] | Base attachment for the supply of surface-mounted cables | ✓ | ✓ | ✓ | ✓ | ✓ | ✓ | – | – | – | – | – | – | – | – | – | – | – |
| **FDB228** | Base (ceiling mounting) | – | – | – | – | – | – | – | – | – | – | – | – | – | ✓ | ✓ | – | – |
| **FDB229** | Base deep (ceiling mounting) | – | – | – | – | – | – | – | – | – | – | – | – | – | ✓ | ✓ | – | – |
| **FDBZ221** | Ring attachment | – | – | – | – | – | – | – | – | – | – | – | – | – | ✓ | ✓ | – | – |
| **FDBZ298** | Blanking plate | – | – | – | – | – | – | – | – | – | – | – | – | – | ✓ | ✓ | – | – |

[1] Optional: Detector dust cap FDZ291 for protection during construction work, [2] Designation plate FDBZ291 and sealing element FDBZ295/297 cannot be used together,
[3] Optional: Protective cage DBZ1194 to protect the detector from damage; EMC protective cage FDBZ294; detector heating FDBH291; designation plate DBZ1193A,
[4] Optional: Designation plate FDBZ291

# Detectors and alarm devices with digital features

Remotely monitor your fire systems with Cloud Applications and Service Tools.
Our alarm devices and detectors conduct 24/7 disturbance-free function tests (**DFT***technology*) without disturbing building occupants and without compromising the uptime of the system. Additionally, detector soiling level and danger level statistics are extracted to enable smart decision making by condition-based detector lifetime and recommend actions to optimize your system.

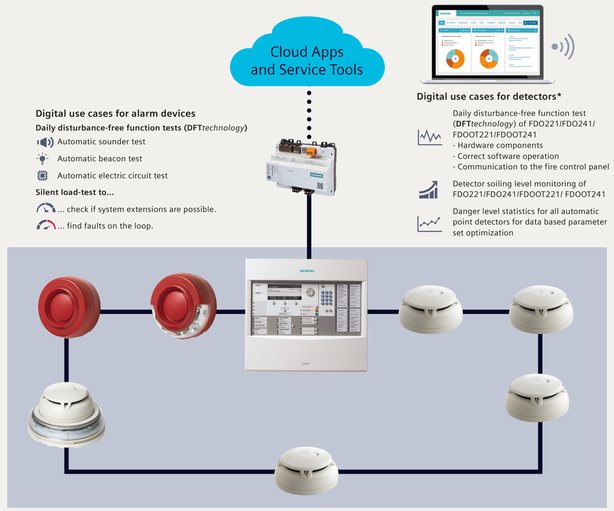


*check availability with your local Siemens representative

# Aspirating Smoke Detection

## FDA261/262

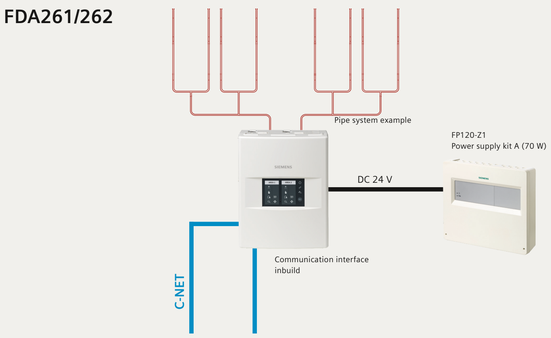


## FDA221/FDA241

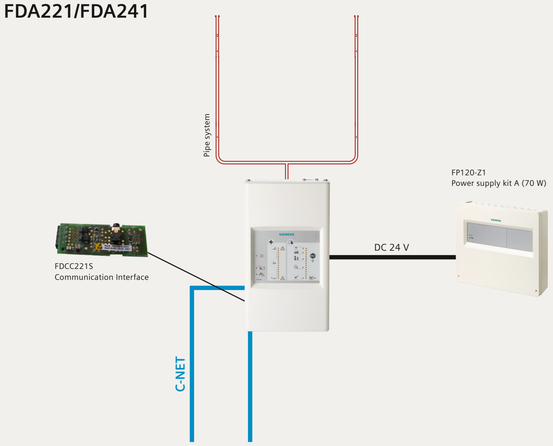


# Highlights for alarming

In the event of a fire it is essential to alert and evacuate people as fast as possible.
A wide product portfolio range offers alarm devices for acoustic and optical alarming.
All devices are loop powered and constantly monitored.

## Sounder

The sounder creates an acoustic alarm signal in case of an event. All devices offers a broad range of tone patterns.
The acoustic perception is outstanding because all tones are synchronized.
– Certified for acoustic alarming according EN 54-3
– 3 different sound levels are selectable (minimum / medium / maximum)
– 16 integrated tone patterns

## Voice

The devices with voice messages are able to play a precise voice instruction for different events in the building.
With help of a voice message, the evacuation process is faster and the building occupants receive clear instructions.
– Certified for acoustic alarming according EN 54-3.
A voice message can be emitted in one or two languages with an attention tone:

**Languages (15 integrated, 2 customizable)**
– English
– German
– French
– Italian
– Spanisch
– English UK
– Dutch
– Sweden
– Norwegian
– Finish
– Danish
– Polish
– Portuguese
– Turkish
– Russian
– Custom language 1
– Custom language 2

**Message categories (5 predefined, 2 customizable)**
– EVAC FIRE
– EVAC EMERGENCY
– ALERT
– TEST
– ALL-CLEAR
– Custom message 1
– Custom message 2

**CUSTOMER-SPECIFIC VOICE MESSAGE**
1. ORDER THE SERVICE "CONVERSION OF VOICE MESSAGE FDSSzzz" TO CREATE A CUSTOMER-SPECIFIC AUDIO LIBRARY
2. ORDER CUSTOMER-SPECIFIC DEVICES (...C) WITH CUSTOM AUDIO LIBRARY ID

**Example for Voice messages in English**

| | |
|---|---|
| – EVAC FIRE | Attention please, this is a fire alarm! Please leave the building immediately by the marked available exits. |
| – EVAC EMERGENCY | Attention please, this is an emergency. Please leave the building by the marked available exits. |
| – ALERT | Attention, an incident has been reported in the building, please await further instructions. |
| – TEST | This is a test message, no action is required. |
| – ALL-CLEAR | Attention please! All clear! The building alert has been resolved. All clear! |

## Beacon

Addressing two senses – an optical and an acoustical signal – speeds up the alert and evacuation process. We increase the awareness of the optical signal with a high flash intensity and a very short pulse length. The device has multiple options for brightness which can be adjusted according to the room size.
– Certified for optical alarming according EN 54-23
– Additional light intensity setting (supplementary optical indication) designed for system extensions or migration.

**Wall devices**

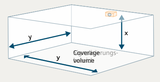


**Category W – Wall mounting:**

| | | | |
|---|---|---|---|
| White LED | | ● Red LED | |
| High: | W-3.2-10 | High: | W-2.8-8.8 |
| Mid: | W-2.4-7.5 | Mid: | W-2.4-7.5 |
| Low: | O-2-6.2 | Low: | O-2-6.2 |

*O = Open category:*
*Wall mounted, cubic coverage as category W*

**Ceiling devices**

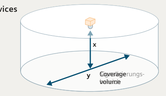


**Category C – Ceiling mounting**

| | | | |
|---|---|---|---|
| White LED | | ● Red LED | |
| High: | O-4-15 | High: | C-3-12 |
| Mid: | C-3-12 | Mid: | C-3-10 |
| Low: | O-2.5-6.5 | Low: | O-2.5-6.5 |

*O = Open category:*
*Ceiling mounted, cylindrical coverage as category C*

# Sinteso Planing Tool FDnet devices

SIEMENS

## Sinteso™ fire control panels

Sinteso fire control panels FC2020; FC2030; FC2040; FC2060; FC2080

(for further details see also the Sinteso Planning Tool – control panels, network and accessories)

**Fire control panel FC2060**

**Fire control panel FC2040**

**Fire control panel FC2020**

## FCnet

**Floor repeater terminal FT2010-A1**
Used for display and operation of alarms from the area monitored.
Order. no.: A5Q00014104

**Optional:**

**Floor repeater terminal FT2010-C1**
with KABA key switch
Order. no.: S54400-F34-A1

**Input/output module FDCIO222**

**Shared properties FT2010 and FT2011:**
- Backlit display with plain text display (6 lines of 40 characters each)
- Power supply and communication (individually addressed) via FDnet, additional 24 V feed possible
- 282x207x79 mm (WxHxD)
- Max. 8 FT2010/FT2011 per FC2020
- Max. 16 FT2010/FT2011 per FC2040
- Max. 50 FT2010/FT2011 per FC2060

**Extinguishing control unit XC10**
The XC10 single-area extinguishing control unit can be fully integrated into all FC20 panels via the FDCIO222 as an independent unit. All relevant incidents are forwarded to the connected control panels. The extinguishing control unit XC10 and the connected extinguishing valves must have a separate power supply.
Order. no.: A6E050060

**Floor repeater display FT2011-A1**
Used for display of alarms from the area monitored.
Order. no.: A5Q00017706

**Flat rear FHA2013-A1**
Reduction of housing depth to 46 mm with FT2010/2011, when a flat installation is required with flush-mounted cabling.
Order. no.: A5Q00016552

**Mimic display driver FT2001-A1**
The mimic display driver controls 48 LEDs, with which events throughout the system can be displayed. The LEDs can be positioned, for example, on a site plan control panel.
Order. no.: A5Q00014417

**LED flat cable 24 LEDs**
Order. no.: 5291410001

**Line separator FDCL221**
The line separator (an electronic switch) is used where several stubs branch off in parallel from the FDnet. This prevents several stub lines failing in the event of a short-circuit. The reuse of installed cables is a typical application field.
Order. no.: A5Q00004011

**Multi-line separator module FDCL221-M**
The multi-line separator has altogether nine integrated line separators with one individual addressing each and one LED indicator per separator. It can be connected to two separate FDnet loops and has:
- connections for detector lines
- connections for stub lines – jumpers to program the operating mode
- yellow LEDs for status indication

Order. no.: S54312-F6-A1

**Alarm indicator (addressable) FDCAI221**
Order. no.: S54370-F10-A1

## Sinteso C-LINE detectors

Sinteso C-LINE detectors are used in standard applications where the risk is average and the potential for deception is moderate. They guarantee optimal fire detection while preventing false alarms through the use of selectable parameter sets. In parameter sets, sensor signals such as amplitudes, gradients, and signal fluctuations are each analyzed on an application-specific basis by means of detection algorithms.

**Detector base FDB221**
Order. no.: A5Q00001664

**Detector base flat FDB222**
Order. no.: S54319-F1-A1

DFT*technology*

**Neural fire detector FDOOT221**
Order. no.: S54310-F20-A1

**Wide-spectrum smoke detector FDO221**
Order. no.: S54310-F18-A1

**Heat detector FDT221**
Order. no.: A5Q00001567

## Sinteso S-LINE fire detectors

With its combination of innovative sensor technology and unique **ASA***technology*, the Sinteso S-LINE for sophisticated applications provides unsurpassed detection security and equal sensitivity to all types of fire, while simultaneously ignoring deceptive phenomena.

The significant innovation of the Sinteso S-LINE is the fact that the detectors interpret situations in real time and automatically switch the area of application of the selected ASA parameters. The detectors respond more sensitively to fire and are more resistant to deceptive phenomena.

**Detector base FDB221**
Order. no.: A5Q00001664

**Detector base flat FDB222**
Order. no.: S54319-F1-A1

DFT*technology*

**ASA – Neural fire detector FDOOT241-A**
For early warning in the event of flame combustion of solid and liquid materials and smoldering fires, suitable for use in the FDnet.
Order. no.: S54310-F21-A1

**ASA – Wide-spectrum smoke detector FDO241**
Optical smoke detector for early warning of smoking flames and smoldering fires.
Order. no.: S54310-F19-A1

**ASA – Neural fire detector FDOOTC241**
Detection properties same as ASA – Neural fire detector FDOOT241-A, plus detection of carbon monoxide (CO) as well as fire-independent CO concentrations, e.g. according to Life Safety norms.
Order. no.: S54311-F1-A1

**ASA – Heat detector FDT241**
Freely programmable thermo-differential or maximum heat detector for the detection of open fires or outbreaks of fire with rapid rise in temperature.
Order. no.: A5Q00004812

**ASA – Flame detector FDF241-9**
The flame detectors are suitable for the detection of smokeless liquid and gas fires and of smoke-forming open fires arising from the burning of materials containing carbon. The FDF241-9 is a 3-channel infrared flame detector for highest application requirements (indoor and outdoor). The three sensors measure in different, specific infrared wavelengths to be able to distinguish open fires from artificial light or sunlight.
Order. no.: A5Q00003006

**Flame detector base FDFB291**
Order. no.: A5Q00003310

**Mounting bracket MV1**
Order. no.: BPZ:3950450001

**Ball and socket joint MWV1**
Order. no.: BPZ:3674840001

**Rain hood DFZ1190**
Order. no.: BPZ:5302660001

**ASA – Linear smoke detector FDL241-9**
Linear smoke detector for monitoring warehouse and factory halls or rooms with complex ceiling structures. Max. distance from detector to reflector: 100 m.
Order. no.: A5Q00002298

**Linear smoke detector base FDLB291**
Order. no.: A5Q00003941

up to 100 m

**Short-distance filter 7 – 10 m DLF1191-AA**
This short-distance filter is required additionally for short distances between 7 and 10 m.
Order. no.: BPZ:4933030001

**Short-distance filter 5 – 8 m DLF1191-AB**
This short-distance filter is required additionally for short distances between 5 and 8 m.
Order. no.: BPZ:4933160001

**External light filter DLF1191-AC**
To prevent faults with high levels of external light.
Order. no.: BPZ:5221480001

**Detector heating DLH1191A**
For use where there is a risk of condensation in detector FDL241-9 and/or in reflector DLR1191
Operating voltage: DC 20 ... 30 V
Operating current: 30 ... 50 mA
Order. no.: BPZ:4787970001

**Reflector for long distance DLR1191 (Prism)**
For distances between 20 and 100 m.
Order. no.: BPZ:4787710001

**Reflector for middle distance DLR1192**
For distances between 30 and 65 m.
Order. no.: BPZ:4788490001

**Reflector for short distance DLR1193**
For distances between 10 and 30 m.
Order. no.: BPZ:4787840001

## Detector base accessories

**Base attachment wet FDB295**
Order. no.: S54319-F21-A1

**Dummy detector FDX291**
Order. no.: S54319-F2-A1

**Base attachment humid FDB293**
Order. no.: A5Q00003945

**Designation plate FDBZ291**
Order. no.: A5Q00002621

**Detector heating FDBH291**
Order. no.: A5Q00004439

**Base attachment FDB291**
Order. no.: A5Q00001603

**Protective cage DBZ1194**
Order. no.: BPZ:4677110001

**Detector locking device FDBZ293**
Order. no.: A5Q00005035

**Detector designation plate DBZ1193A**
Order. no.: BPZ:4864330001

**Detector dust cap FDZ291**
Order. no.: A5Q00004814

## Alarm indicators

**Alarm indicator FDAI92**
Order. no.: S54370-F3-A1

**Alarm indicator FDAI91**
Order. no.: S54370-F9-A1

**Adapter frame AI330**
Order. no.: BPZ:3169430001

**Alarm indicator FDAI93**
Order. no.: S54370-F5-A1

## Conventional

**Switching unit collective (single action) DMA1104D**
Protection category: IP54
Order. no.: A5Q00005925

**Switching unit collective (double action) DMA1103D**
Protection category: IP54
Order. no.: A5Q00004470

**Manual call point DM1103 (Ex)**
Order. no.: BPZ:5222870001

**Infrared flame detector unit collective "Ex" DF1101-Ex**
Order. no.: BPZ:5166750001

**ASA – Multi-sensor detector FDOOT241-A9-Ex**
Order. no.: S54329-F7-A1

**Base for infrared flame detectors DF1191 DFB1190**
Order. no.: BPZ:5165360001

**Shunt Zener diode barrier SB3**
Order. no.: BPZ:4837400001

## Addressable

## Ex zone

**Detector base FDB221 addressable**
Order. no.: A5Q00001664

**Manual call point FDM223-Ex**
Order. no.: S54329-F5-A1

**Alarm indicator FDAI92-Ex**
Order. no.: S54370-F4-A1

**ASA – Multi-sensor detector FDOOT241-A9-Ex**
Order. no.: S54329-F7-A1

FDnet-Ex

**Alarm indicator FDAI93-Ex**
Order. no.: S54370-F6-A1

**Detector base flat FDB222 addressable**
Order. no.: S54319-F1-A1

**Line adapter (Ex) FDCL221-Ex**
Order. no.: S54329-F4-A1

DC 24 V

**Zone module, externally powered FDCI223**
- One collective/conventional detector group
- Up to 32 conventional detectors connectable
- Application for Ex zones with SB3
- Communication via FDnet (individually addressed)

Order. no.: S54322-F5-A1

**Air sampling smoke detection kit FDBZ290**
The air sampling smoke detection kit is a passive monitoring system without a fan of its own. It uses the pressure differences within the ventilation system to continuously take air samples from the ventilation duct via the air flow tube. It then supplies the samples to the air sampling smoke detection kit where the FDOOT241-A9 is located. The point detector FDOOT241 has two parameter sets, "Super Sensitive" and "Ultra Sensitive", which have been developed specially for fast and sensitive detection response.

**Air sampling smoke detection kit FDBZ290**
(without air flow tube)
Order. no.: S54319-S32-A1

**Air flow tube FDBZ290-AA/AB/AC**
Length 0.6 m/1.5 m/2.8 m
Order. no.: S54319-B33-A1/A2/A3

**Mounting bracket FDBZ290-AD**
Order. no.: S54319-B34-A1

**Sealing kit FDBZ292-AD**
Order. no.: A5Q00021367

**Aspirating smoke detectors**
The aspiration smoke detector portfolio use the dual wavelength technology for earliest alarming. The portfolio offers solutions for small to large – sized, business critical environments, up to 6700 m²

**FDA261**
Order. no.: S54333-F101-A1

**FDA262**
Order. no.: S54333-F102-A1

**FDA221**
Order. no.: S54333-F15-A1

**FDA241**
Order. no.: S54333-F17-A1

**Accessories:**

**Relay board FDAZ295**

**Interface board FDAZ296**

**Accessories:**

**Communication interface FDCC221S**
Order. no.: S24218-A201-A2

**Power supply kit FP120-Z1**

**Power supply kit A (70 W) FP120-Z1**
The autonomous power supply converts the mains voltage to system voltage of DC 24 V and charges the batteries.
Order. no.: S54400-S122-A1

**Housing FDCH221 IP65**
To mount FDCI221, FDCIO221, FDCI222, FDCIO222, FDCI223, FDCIO223, FDCIO224.
Order. no.: S54312-F3-A1

**Input/output module "transponder" FDCIO223**
The module has two inputs/outputs and is used for
- connecting conventional detectors (point detectors, special detectors)
- connecting detectors by means of safety barriers in explosion-protected areas
- controlling alarm devices (flashing lights, sirens)
- for monitored control (e.g. fire dampers)

Order. no.: S24218-B102-A1

## Modernization

**Conventional detector**
- Siemens standard (DS11/Sigmacon/ SynoLINE600; MS7; MS9; MS24)

**ASA – Neural fire detector FDOOT241-A9**
Combination with other detectors on a conventional detector line possible.
Order. no.: A5Q00004813

**Detector base FDB201 (collective)**
Order. no.: A5Q00003814

**Detector base flat FDB202 (collective)**
Order. no.: S54319-F3-A1

**ASA – Neural multiple protocol detector**
Connection on FDnet possible.

**FDOOT241-A3**
ASA – Neural fire detector (AlgoRex AnalogPLUS)
Order. no.: S54310-F10-A1

**FDOOT241-A4**
ASA – Neural fire detector (SIGMALOOP)
Order. no.: S54310-F9-A1

**FDOOT241-A5**
ASA – Neural fire detector (AlgoRex Interactive)
Order. no.: S54310-F14-A1

**FDB241**
Base adapter (AnalogPLUS/SIGMALOOP)
Order. no.: S54319-F13-A1

**FDB251**
Base adapter (AlgoRex Interactive)
Order. no.: S54319-F28-A1

4 isolated control inputs

4 isolated control inputs

Fire control

4 isolated control outputs

**Input/output module FDCIO222/224**
- 4 monitored inputs
- 4 outputs for fire controls or fire dampers

Relay outputs:
- 4 potential-free working/rest contacts

Contact loading:
- AC 250 V/4 A
- DC 30 V/4 A

**FDCIO222**
Order. no.: A5Q00002369

**FDCIO224**
Order. no.: A5Q00018689

**Input module FDCI222**
- 4 monitored inputs

Order. no.: A5Q00001984

**Input module FDCI221**
- 1 monitored input

Order. no.: S54312-F1-A1

**Input/output module FDCIO221**
- 1 monitored input
- 1 output
- Relay output DC 30 V/2 A rated
- Output can be configured as monitored, but a separate DC 24 V power supply is required

Order. no.: S54312-F2-A1

DC 24 V (as output)

## FDnet

The FDnet (Field Device network) is a modern, multi-purpose bus system. It allows rapid, fail-safe communication between the Sinteso bus elements and the fire control panel.

**Characteristics:**
- S-LINE and C-LINE bus elements can be mixed on the FDnet
- Use of all cable types (with/without shielding)
- Integration of star-shaped cable networks without modifications to cable network
- Acoustic and visual signaling on the loop
- Up to 40 T-taps
- Up to 252 bus elements on one loop
- Cable lengths up to 3.3 km and up to 252 bus elements
- No shielding necessary
- 2-wire ring bus
- Power supply to all bus elements via the FDnet (except input/output module FDCIO221, zone module FDCI223, "transponder" FDCIO223, extinguishing control unit XC10, aspirating smoke detectors FDA221/241)

## Alarm equipment for audible and visible alarming with DFT*technology*

**Base (wall mounting) FDB226-R**
Order. no.: S54364-B1-A1

**Base (wall mounting) FDB226-W**
Order. no.: S54364-B2-A1

**Base deep (wall mounting, IP65) FDB227-R**
Order. no.: S54364-B3-A1

**Base deep (wall mounting, IP65) FDB227-W**
Order. no.: S54364-B4-A1

**Base (ceiling mounting) FDB228**
Order. no.: S54364-B5-A1

**Base deep (ceiling mounting) FDB229**
Order. no.: S54364-B6-A1

Alarm

**Sounder base FDSB291**
The sounder base can only be used together with an automatic C-LINE or S-LINE FDOOT, FDT or FDO detector.
Sound level: 88 dBA/1 m
Order. no.: A5Q00001647

**Sounder FDS224-R**
Housing red
Order. no.: S54364-F1-A1

**Sounder FDS224-W**
Housing white
Order. no.: S54364-F2-A1

**Voice sounder FDS225-R**
Housing red
Order. no.: S54364-F3-A1

**Voice sounder FDS225-W**
Housing white
Order. no.: S54364-F4-A1

**Sounder beacon FDS226-RR**
Housing red/LED red
O-2-6.2/W-2.4-7.5/W-2.8-8.8
Order. no.: S54364-F5-A1

**Sounder beacon FDS226-RW**
Housing red/LED white
O-2-6.2/W-2.4-7.5/W-3.2-10
Order. no.: S54364-F6-A1

**Sounder beacon FDS226-WR**
Housing white/LED red
O-2-6.2/W-2.4-7.5/W-2.8-8.8
Order. no.: S54364-F7-A1

**Sounder beacon FDS226-WW**
Housing white/LED white
O-2-6.2/W-2.4-7.5/W-3.2-10
Order. no.: S54364-F8-A1

**Standard voice messages**

**Voice sounder beacon FDS227-RR**
Housing red / LED red
O-2-6.2 / W-2.4-7.5 / W-2.8-8.8
Order. no.: S54364-F9-A1

**Voice sounder beacon FDS227-RW**
Housing red / LED white
O-2-6.2 / W-2.4-7.5 / W-3.2-10
Order. no.: S54364-F10-A1

**Voice sounder beacon FDS227-WR**
Housing white / LED red
O-2-6.2 / W-2.4-7.5 / W-2.8-8.8
Order. no.: S54364-F11-A1

**Voice sounder beacon FDS227-WW**
Housing white / LED white
O-2-6.2 / W-2.4-7.5 / W-3.2-10
Order. no.: S54364-F12-A1

**Customized voice messages**

**Voice sounder beacon FDS227-RR-C**
Housing red / LED red
O-2-6.2 / W-2.4-7.5 / W-2.8-8.8
Order. no.: S54364-F9-A2

**Voice sounder beacon FDS227-RW-C**
Housing red / LED white
O-2-6.2 / W-2.4-7.5 / W-3.2-10
Order. no.: S54364-F10-A2

**Voice sounder beacon FDS227-WR-C**
Housing white / LED red
O-2-6.2 / W-2.4-7.5 / W-2.8-8.8
Order. no.: S54364-F11-A2

**Voice sounder beacon FDS227-WW-C**
Housing white / LED white
O-2-6.2 / W-2.4-7.5 / W-3.2-10
Order. no.: S54364-F12-A2

**Sounder beacon base FDSB226-WR**
LED red
O-2.5-6.5 / C-3-10 / C-3-12
Order. no.: S54364-F13-A1

**Sounder beacon base FDSB226-WW**
LED white
O-2.5-6.5 / C-3-12 / O-4-15
Order. no.: S54364-F14-A1

**Standard voice messages**

**Voice sounder beacon base FDSB227-WR**
LED red
O-2.5-6.5 / C-3-10 / C-3-12
Order. no.: S54364-F15-A1

**Voice sounder beacon base FDSB227-WW**
LED white
O-2.5-6.5 / C-3-12 / O-4-15
Order. no.: S54364-F16-A1

**Customized Voice Messages**

**Voice sounder beacon base FDSB227-WR-C**
LED red
O-2.5-6.5 / C-3-10 / C-3-12
Order. no.: S54364-F15-A2

**Voice sounder beacon base FDSB227-WW-C**
LED white
O-2.5-6.5 / C-3-12 / O-4-15
Order. no.: S54364-F16-A2

With detector

Without detector

**Ring attachment FDBZ221**
Order. no.: S54364-B7-A1

**Blanking plate FDBZ298**
Order. no.: S54364-B8-A1

**Detector base flat FDB222**
Order. no.: S54319-F1-A1

**Conversion of voice message FDSS227**
Service to convert custom audio message text
Order. no.: L54364-Y1-A1

**Shared characteristics:**
- Up to 13 different tones, incl. "evacuate" as specified in DIN 33404-3
- Different volume and sound for prealarm and main alarm
- Without additional power supply
- Integrated line separator

## Manual call points and accessories

**Manual call point FDM221**
Standard, available in different colors.

**Electronic switching unit FDME221**
Order no.: A5Q00002451

**Housings:**

**Housing red with key FDMH291-R**
Order no.: A5Q00002217

**Housing yellow with key FDMH291-Y**
Order no.: A5Q00004979

**Housing green with key FDMH291-G**
Order no.: A5Q00004981

**Housing blue with key FDMH291-B**
Order no.: A5Q00004980

**Accessories:**

**Protective cover FDMC291**
Order no.: A5Q00001644

**Manual call point FDM225**
Resettable, available in red and can be used for flush mounting.

**Manual call point with resettable plastic element FDM225-RP**
Order no.: A5Q00012020

**Manual call point with glass plate FDM225-RG**
Order no.: A5Q00013434

**Accessories:**

**Back box FDMH295-R**
Order no.: A5Q00013437

**Back box with holes and grommet FDMH295-S**
Order no.: A5Q00013438

**Protective cover FDMC295**
Order no.: A5Q00013440

**Manual call point FDM226**
Resettable and IP66, available in red.

**Manual call point with resettable plastic element incl. back box FDM226-RP**
Order no.: A5Q00013436

**Manual call point with glass plate incl. back box FDM226-RG**
Order no.: A5Q00013435

**Accessories:**

**Protective cover FDMC295**
Order no.: A5Q00013440

**Manual call point FDM231-RP**
Standard, available in red.

**Manual call point complete FDM231-RP**
Order no.: S54311-F11-A1

**Electronic switching unit incl. key FDMK231 FDME231**
Order no.: S54311-B14-A1

**Accessories:**

**Back box red FDMH231-S-R**
Order no.: S54311-B12-A1

**Screwed cable gland M20 x 1.5**
Order no.: A5Q00004478

**Back nut M20**
Order no.: A5Q00004479

**Manual call point FDM224**
IP44 or IP64, with direct operation available in different colors.

**Electronic switching unit FDME224**
Order no.: A5Q00009392

**Manual call point FDM223**
IP44 or IP64, with indirect alarm actuation, available in different colors.

**Electronic switching unit FDME223**
Order no.: A5Q00003087

**Housings with glass and key (FDM224 and FDM223):**

| | |
|---|---|
| Housing red FDMH293-R | Order no.: A5Q00004023 |
| Housing yellow FDMH293-Y | Order no.: A5Q00004908 |
| Housing green FDMH293-G | Order no.: A5Q00004911 |
| Housing blue FDMH293-B | Order no.: A5Q00004909 |
| Housing orange FDMH293-O | Order no.: S54311-F2-A1 |
| Housing red FDMH297-R | Order no.: S54311-B7-A1 |

**Accessories (for FDM224 and FDM223):**

| | |
|---|---|
| Protection seal DMZ1197-AD | Order no.: BPZ:5470680001 |
| Protective cover DMZ1197-AC | Order no.: BPZ:5223550001 |
| Locking plug M20 (1 hole) | Order no.: A5Q00006735 |

**Manual call point FDM224H**
Heavy Duty, IP44 or IP64, with direct alarm actuation.

**Electronic switching unit FDME224**
Order no.: A5Q00009392

**Housing:**

**Housing red FDMH292-R**
Order no.: A5Q00005525

**Accessories:**

**Protection seal DMZ1197-AD**
Order no.: BPZ:5470680001

**Protective cover DMZ1197-AC**
Order no.: BPZ:5223550001

**Screwed cable gland M20 x 1.5**
Order no.: A5Q00004478

**Manual call point FDM223H**
Heavy Duty, IP44 or IP64, with indirect alarm actuation.

**Electronic switching unit FDME223**
Order no.: A5Q00003087

**Housing:**

**Housing red FDMH292-R**
Order no.: A5Q00005525

**Accessories:**

**Protection seal DMZ1197-AD**
Order no.: BPZ:5470680001

**Protective cover DMZ1197-AC**
Order no.: BPZ:5223550001

**Screwed cable gland M20 x 1.5**
Order no.: A5Q00004478

**Manual call point FDM243H**
Heavy Duty, IP66, with indirect alarm actuation.

**Manual call point complete**
Order no.: S54311-F8-A1

## SWING radio fire detection

**Radio gateway FDCW241**
The radio gateway FDCW241 enables to bidirectionally connect up to 30 battery-powered SWING radio devices.
Order. no.: S54370-F11-A1

SWING devices are communicating via multi-band (433/868 MHz) multi-hop mesh technology

**Base FDB271**
Order. no.: S54319-F12-A1

**ASA – Neural radio fire detector FDOOT271**
Order. no.: S54313-F1-A1

**Radio manual call point FDM273**

**Housing red FDMH273-R**
Order. no.: S54323-B109-A1

**Radio switching unit FDME273**
Order. no.: S54323-B108-A1

**Radio manual call point FDM275**
Order. no.: S54323-F105-A1 (check for availability)

**Battery BAT3.6-10**
Order. no.: S54370-Z11-A1

**Legend for the designation of fire detectors:**

| | |
|---|---|
| (green line) | SBackbone (FCnet/LAN) |
| (orange line) | Cluster (FCnet/SAFEDLINK) |
| (blue line) | FDnet |
| FCnet | Fire Control network |
| FDnet | Field Device network |
| FDO | Fire Detector "optical" (optical forward dispersed light alarm) |
| FDOOT | Fire Detector "optical/optical/thermal" (optical forward/backward dispersed light alarm incl. heat sensor) |
| FDOOTC | Fire Detector "optical/optical/thermal/chemical" (optical forward/backward dispersed light alarm incl. heat sensor and CO sensor) |
| FDT | Fire Detector "thermal" (heat differential alarm, can also be programmed as maximum heat detector) |
| ...241 | S-LINE |
| ...221 | C-LINE |
| ...xxx-A9 | connection to limit value detection technology possible |
| ...xxx-8 | connection to pulse detection technology possible |

## Detailed planning information

Detailed information for planning of the system are available in the planning document, Doc. ID 008843.

© Siemens 2021